Electrolux PROFESSIONAL

SkyLine ProS
LPG Gas Combi Oven 6GN1/1

ITEM #

MODEL #

NAME #

SIS #

AIA #

217660 (ECOG61K2H0)

SkyLine ProS combi boilerless oven with touch screen control, 6x1/1GN, gas, 2 cooking modes (recipe program, manual), automatic cleaning, LPG

Short Form Specification

Item No.

Combi oven with high resolution full touch screen interface, multilanguage.
- Boilerless steaming function to add and retain moisture.
- OptiFlow air distribution system to achieve maximum performance with 7 fan speed levels.
- SkyClean: Automatic and built-in self cleaning system. 5 automatic cycles (soft, medium, strong, extra strong, rinse-only) and green functions to save energy, water, detergent and rinse aid.
- Cooking modes: Programs (a maximum of 1000 recipes can be stored and organized in 16 different categories); Manual; EcoDelta cooking cycle.
- Special functions: MultiTimer cooking, Plan-n-Save to cut running costs, Make-it-Mine to customize interface, SkyHub to customize homepage, agenda MyPlanner, automatic backup mode to avoid downtime.
- USB port to download HACCP data, programs and settings. Connectivity ready.
- Single sensor core temperature probe.
- Double-glass door with LED lights.
- Stainless steel construction throughout.
- Supplied with n.1 tray rack 1/1 GN, 67 mm pitch.

APPROVAL:

Main Features

- Boilerless steaming function to add and retain moisture for high quality, consistent cooking results.
- Dry hot convection cycle (max 300 °C) ideal for low humidity cooking. Automatic moistener (11 settings) for boiler-less steam generation:-0 = no additional moisture (browning, au gratin, baking, pre-cooked food)-1-2 = low moisture (small portions of meat and fish)-3-4 = medium low moisture (large pieces of meat, reheating, roasted chicken and proving)-5-6 = medium moisture (roasted vegetable and first step of roasted meat & fish)-7-8 = medium-high moisture (stewed vegetables)-9-10 = high moisture (poached meat and jacket potatoes)
- EcoDelta cooking: cooking with food probe maintaining preset temperature difference between the core of the food and the cooking chamber.
- Programs mode: a maximum of 1000 recipes can be stored in the oven's memory, to recreate the exact same recipe at any time. The recipes can be group in 16 different categories to better organize the menu. 16-step cooking programs also available.
- MultiTimer function to manage up to 20 different cooking cycles at the same time, improving flexibility and ensuring excellent cooking results. Can be saved up to 200 MultiTimer programs.
- Fan with 7 speed levels from 300 to 1500 RPM and reverse rotation for optimal evenness. Fan stops in less than 5 seconds when door is opened.
- Single sensor core temperature probe included.
- Pictures upload for full customization of cooking cycles.
- Automatic fast cool down and pre-heat function.
- Different chemical options available: solid (phosphate-free), liquid (requires optional accessory).
- GreaseOut: predisposed for integrated grease drain and collection for safer operation (dedicated base as optional accessory).
- USB port to download HACCP data, share cooking programs and configurations. USB port also allows to plug-in sous-vide probe (optional accessory).
- Back-up mode with self-diagnosis is automatically activated if a failure occurs to avoid downtime.
- Capacity: 6 GN 1/1 trays.
- OptiFlow air distribution system to achieve maximum performance in chilling/heating eveness and temperature control thanks to a special design of the chamber.

Construction

- Double thermo-glazed door with open frame construction, for cool outside door panel. Swing hinged easy-release inner glass on door for easy cleaning.
- Seamless hygienic internal chamber with all rounded corners for easy cleaning.
- 304 AISI stainless steel construction throughout.
- Front access to control board for easy service.
- IPX 5 spray water protection certification for easy cleaning.

- Supplied with n.1 tray rack 1/1 GN, 67 mm pitch.

User Interface & Data Management

- High resolution full touch screen interface (translated in more than 30 languages) - color-blind friendly panel.
- Make-it-mine feature to allow full personalization or locking of the user interface.
- SkyHub lets the user group the favorite functions in the homepage for immediate access.
- MyPlanner works as an agenda where the user can plan the daily work and receive personalized alerts for each task.
- Connectivity ready for real time access to connected appliances from remote and HACCP monitoring (requires optional accessory).
- Trainings and guidances supporting materials easily accessible by scanning QR-Code with any mobile device.
- Automatic consumption visualization at the end of the cycle.
- Connectivity ready for real time access to connected appliances from remote and data monitoring (requires optional accessory – contact the Company for more details).

Sustainability

- Human centered design with 4-star certification for ergonomics and usability.
- Wing-shaped handle with ergonomic design and hands-free opening with the elbow, making managing trays simpler (Registered Design at EPO).
- Reduced power function for customized slow cooking cycles.
- SkyClean: Automatic and built-in self cleaning system. 5 automatic cycles (soft, medium, strong, extra strong, rinse-only) and green functions to save energy, water, detergent and rinse aid. Also programmable with delayed start.
- Plan-n-Save function organizes the cooking sequence of the chosen cycles optimizing the work in the kitchen from a time and energy efficiency point of view.

Included Accessories

- 1 of - NOT TRANSLATED - PNC 922706

Optional Accessories

- Water softener with cartridge and flow meter (high steam usage) PNC 920003 ❑
- Water softener with salt for ovens with automatic regeneration of resin PNC 921305 ❑
- Wheel kit for 6 & 10 GN 1/1 and 2/1 GN oven base (not for the disassembled one) PNC 922003 ❑
- Pair of AISI 304 stainless steel grids, GN 1/1 PNC 922017 ❑
- Pair of grids for whole chicken (8 per grid - 1,2kg each), GN 1/1 PNC 922036 ❑
- AISI 304 stainless steel grid, GN 1/1 PNC 922062 ❑
- Grid for whole chicken (4 per grid - 1,2kg each), GN 1/2 PNC 922086 ❑
- External side spray unit (needs to be mounted outside and includes support to be mounted on the oven) PNC 922171 ❑
- Baking tray for 5 baguettes in perforated aluminum with silicon coating, 400x600x38mm PNC 922189 ❑
- Baking tray with 4 edges in perforated aluminum, 400x600x20mm PNC 922190 ❑
- Baking tray with 4 edges in aluminum, 400x600x20mm PNC 922191 ❑
- Pair of frying baskets PNC 922239 ❑
- AISI 304 stainless steel bakery/pastry grid 400x600mm PNC 922264 ❑
- Double-step door opening kit PNC 922265 ❑
- Grid for whole chicken (8 per grid - 1,2kg each), GN 1/1 PNC 922266 ❑
- USB probe for sous-vide cooking PNC 922281 ❑
- Grease collection tray, GN 1/1, H=100 mm PNC 922321 ❑
- Kit universal skewer rack and 4 long skewers for Lenghtwise ovens PNC 922324 ❑
- Universal skewer rack PNC 922326 ❑
- 4 long skewers PNC 922327 ❑
- Smoker for lengthwise and crosswise oven (4 kinds of smoker wood chips are available on request) PNC 922338 ❑
- Multipurpose hook PNC 922348 ❑
- 4 flanged feet for 6 & 10 GN , 2", 100-130mm PNC 922351 ❑
- Grid for whole duck (8 per grid - 1,8kg each), GN 1/1 PNC 922362 ❑
- Tray support for 6 & 10 GN 1/1 disassembled open base PNC 922382 ❑
- Wall mounted detergent tank holder PNC 922386 ❑
- - NOT TRANSLATED - PNC 922390 ❑
- Tray rack with wheels, 6 GN 1/1, 65mm pitch (included) PNC 922600 ❑
- Tray rack with wheels 5 GN 1/1, 80mm pitch PNC 922606 ❑
- Bakery/pastry tray rack with wheels holding 400x600mm grids for 6 GN 1/1 oven and blast chiller freezer, 80mm pitch (5 runners) PNC 922607 ❑
- Slide-in rack with handle for 6 & 10 GN 1/1 oven PNC 922610 ❑
- Open base with tray support for 6 & 10 GN 1/1 oven PNC 922612 ❑
- Cupboard base with tray support for 6 & 10 GN 1/1 oven PNC 922614 ❑
- Hot cupboard base with tray support for 6 & 10 GN 1/1 oven holding GN 1/1 or400x600mm PNC 922615 ❑
- External connection kit for detergent and rinse aid PNC 922618 ❑
- Grease collection kit for GN 1/1-2/1 cupboard base (trolley with 2 tanks, open/close device and drain) PNC 922619 ❑
- Stacking kit for gas 6 GN 1/1 oven placed on gas 6 GN 1/1 oven PNC 922622 ❑
- Stacking kit for gas 6 GN 1/1 oven placed on gas 10 GN 1/1 oven PNC 922623 ❑
- Trolley for slide-in rack for 6 & 10 GN 1/1 oven and blast chiller freezer PNC 922626 ❑
- Trolley for mobile rack for 2 stacked 6 GN 1/1 ovens on riser PNC 922628 ❑
- Trolley for mobile rack for 6 GN 1/1 on 6 or 10 GN 1/1 ovens PNC 922630 ❑
- Riser on feet for 2 6 GN 1/1 ovens or a 6 GN 1/1 oven on base PNC 922632 ❑
- Riser on wheels for stacked 2x6 GN 1/1 ovens, height 250mm PNC 922635 ❑
- Stainless steel drain kit for 6 & 10 GN oven, dia=50mm PNC 922636 ❑

The company reserves the right to make modifications to the products without prior notice. All information correct at time of printing.

• Plastic drain kit for 6 &10 GN oven, dia=50mm	PNC 922637	❑
• Grease collection kit for open base (2 tanks, open/close device and drain)	PNC 922639	❑
• Wall support for 6 GN 1/1 oven	PNC 922643	❑
• Dehydration tray, GN 1/1, H=20mm	PNC 922651	❑
• Flat dehydration tray, GN 1/1	PNC 922652	❑
• Open base for 6 & 10 GN 1/1 oven, disassembled	PNC 922653	❑
• Bakery/pastry rack kit for 6 GN 1/1 oven with 5 racks 400x600mm and 80mm pitch	PNC 922655	❑
• Stacking kit for gas 6 GN 1/1 oven placed on 7kg and 15kg crosswise blast chiller freezer	PNC 922657	❑
• Heat shield for stacked ovens 6 GN 1/1 on 6 GN 1/1	PNC 922660	❑
• Heat shield for stacked ovens 6 GN 1/1 on 10 GN 1/1	PNC 922661	❑
• Heat shield for 6 GN 1/1 oven	PNC 922662	❑
• Kit to convert from natural gas to LPG	PNC 922670	❑
• Kit to convert from LPG to natural gas	PNC 922671	❑
• Flue condenser for gas oven	PNC 922678	❑
• Fixed tray rack for 6 GN 1/1 and 400x600mm grids	PNC 922684	❑
• Kit to fix oven to the wall	PNC 922687	❑
• Tray support for 6 & 10 GN 1/1 open base	PNC 922690	❑
• 4 adjustable feet with black cover for 6 & 10 GN ovens, 100-115mm	PNC 922693	❑
• Detergent tank holder for open base	PNC 922699	❑
• Bakery/pastry runners 400x600mm for 6 & 10 GN 1/1 oven base	PNC 922702	❑
• Wheels for stacked ovens	PNC 922704	❑
• - NOT TRANSLATED -	PNC 922706	❑
• Mesh grilling grid	PNC 922713	❑
• Probe holder for liquids	PNC 922714	❑
• Exhaust hood with fan for 6 & 10 GN 1/1 ovens	PNC 922728	❑
• Exhaust hood with fan for stacking 6+6 or 6+10 GN 1/1 ovens	PNC 922732	❑
• Exhaust hood without fan for 6&10 1/1GN ovens	PNC 922733	❑
• Exhaust hood without fan for stacking 6+6 or 6+10 GN 1/1 ovens	PNC 922737	❑
• Fixed tray rack, 5 GN 1/1, 85mm pitch	PNC 922740	❑
• 4 high adjustable feet for 6 & 10 GN ovens, 230-290mm	PNC 922745	❑
• Tray for traditional static cooking, H=100mm	PNC 922746	❑
• Double-face griddle, one side ribbed and one side smooth, 400x600mm	PNC 922747	❑
• - NOT TRANSLATED -	PNC 922752	❑
• - NOT TRANSLATED -	PNC 922773	❑
• - NOT TRANSLATED -	PNC 922776	❑
• Non-stick universal pan, GN 1/1, H=20mm	PNC 925000	❑
• Non-stick universal pan, GN 1/ 1, H=40mm	PNC 925001	❑
• Non-stick universal pan, GN 1/1, H=60mm	PNC 925002	❑
• Double-face griddle, one side ribbed and one side smooth, GN 1/1	PNC 925003	❑
• Aluminum grill, GN 1/1	PNC 925004	❑
• Frying pan for 8 eggs, pancakes, hamburgers, GN 1/1	PNC 925005	❑
• Flat baking tray with 2 edges, GN 1/1	PNC 925006	❑
• Baking tray for 4 baguettes, GN 1/1	PNC 925007	❑
• Potato baker for 28 potatoes, GN 1/1	PNC 925008	❑
• Non-stick universal pan, GN 1/2, H=20mm	PNC 925009	❑
• Non-stick universal pan, GN 1/2, H=40mm	PNC 925010	❑
• Non-stick universal pan, GN 1/2, H=60mm	PNC 925011	❑
• Compatibility kit for installation on previous base GN 1/1	PNC 930217	❑

The company reserves the right to make modifications to the products without prior notice. All information correct at time of printing.

SkyLine ProS
LPG Gas Combi Oven 6GN1/1

Front

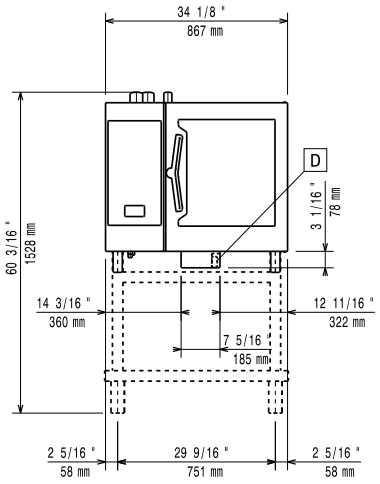

Side

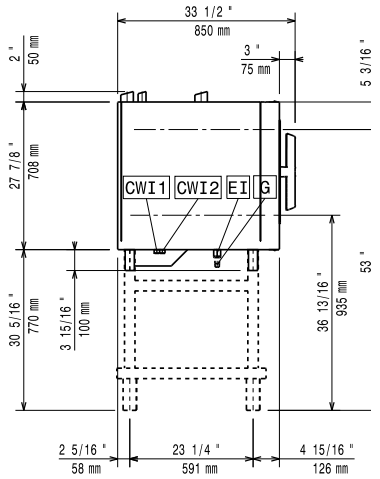

CWI1	=	Cold Water inlet 1	EI	=	Electrical inlet (power)
CWI2	=	Cold Water Inlet 2	G	=	Gas connection
D	=	Drain			
DO	=	Overflow drain pipe			

Top

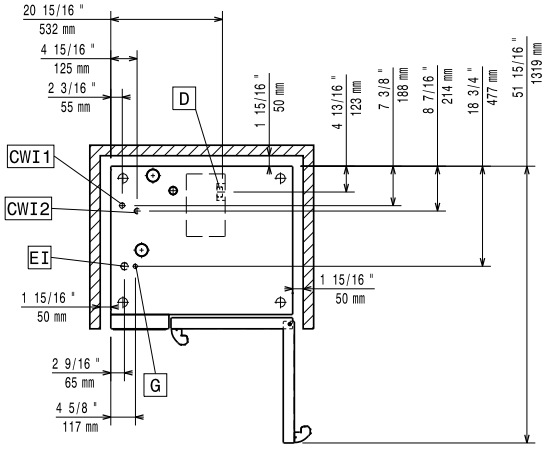

Electric

Supply voltage:	
217660 (ECOG61K2H0)	220-240 V/1 ph/50 Hz
Electrical power, default:	1.1 kW
Electrical power max.:	1.1 kW
Circuit breaker required	

Gas

Gas Power:	12 kW
Standard gas delivery:	LPG, G31
ISO 7/1 gas connection diameter:	1/2" MNPT
Total thermal load:	40908 BTU (12 kW)

Water:

Water inlet "FCW" connection:	3/4"
Pressure, bar min/max:	1-6 bar
Drain "D":	50mm
Max inlet water supply temperature:	30 °C
Hardness:	5 °fH / 2.8 °dH
Chlorides:	<10 ppm
Conductivity:	>50 µS/cm

Electrolux Professional recommends the use of treated water, based on testing of specific water conditions.

Please refer to user manual for detailed water quality information.

Installation:

Clearance:	Clearance: 5 cm rear and right hand sides.
Suggested clearance for service access:	50 cm left hand side.

Capacity:

GN:	6 - 1/1 Gastronorm
Max load capacity:	30 kg

Key Information:

Door hinges:	
External dimensions, Width:	867 mm
External dimensions, Depth:	775 mm
External dimensions, Height:	808 mm
Net weight:	115 kg
Shipping weight:	132 kg
Shipping volume:	0.89 m³

ISO Certificates

ISO Standards:	04

The company reserves the right to make modifications to the products without prior notice. All information correct at time of printing.